INDIAN INSTITUTE OF INFORMATION TECHNOLOGY, DESIGN AND MANUFACTURING, KURNOOL

ఇండియన్ ఇన్స్టిట్యూట్ ఆఫ్ ఇన్ఫర్మేషన్ టెక్నాలజీ,
డిజైన్ అండ్ మాన్యుఫ్యాక్చరింగ్, కర్నూలు

भारतीय सूचना प्रौद्योगिकी, अभिकल्पना
एवं विनिर्माण संस्थान, कर्नूल

Summer Internship Report

for

Mobile Communication and Use of AI in 4G and 5G QoS optimization

Done in partial fulfilment for the degree

Bachelor of Technology

in

Electronics and Communication Engineering

at

Vodafone Idea Limited

by

Vikramaditya Singh

Roll No: 123EC0042

Acknowledgement

It is my pleasure to be indebted to various people, who directly or indirectly contributed in the development of this work and who influenced my thinking, behavior, and acts during the course of study.

I express my sincere gratitude to **Mr. Pradeep Singh, CTO** of Vodafone Idea Ltd. Bihar, Jharkhand & Odisha zone for providing me an opportunity to undergo summer training at **Vodafone Idea Ltd** Patna.

I am thankful to **Mr. Sanjib Sadhukhan** (Training Supervisor) and **Mr. Dilip Kumar** (Mentor) at Vodafone Idea Ltd, Patna for his support, cooperation and motivation provided to me during the training for constant inspiration and presence. I also thank **HR Department, Vodafone Idea Ltd Patna** for this opportunity.

I also extend my sincere appreciation to **Dr. Valluri Siva Prasad**, HOD Electronics & Communication engineering & **Dr. Korra Sathya Babu**, Associate Dean(Academics) at IIITDM Kurnool for providing me precious time in accomplishing my project report.

Lastly, I would like to thank the almighty and my parents for their moral support and my friends with whom I shared my day-to-day experience and received lots of suggestions that improved my quality of work.

Vikramaditya Singh
IIITDM , Kurnool

Table of Contents

S. No.	Section Title	Page No.
1	Title Page	0
2	Acknowledgement	1
3	Table of content	2
4	Introduction to Telecommunication	3
5	Company Profile – Vodafone Idea Limited	4
6	Introduction and Basic Concepts of LTE	6
7	Call Flow in LTE	8
8	LTE KPIs and Their Categories	10
9	Overview of 4G and 5G Technologies	13
10	5G Deployment Architectures	14
11	Quality of Service (QoS) in 5G Networks	15
12	AI-Driven Optimization for Enhancing 4G/5G Network Performance	19
13	AI Applications in 4G/5G Network Optimization (Tabular Summary)	20
14	AI Advantages in Network Efficiency and QoS	21
15	AI in Traffic Management and Forecasting Techniques (LSTM, ML, DL)	22
16	LSTM in 4G/5G Network Optimization	23
17	AI Techniques for Resource Allocation in 4G/5G	26
18	Key AI Models for Resource Allocation (RL, DRL, GCN, etc.)	27
19	Reinforcement Learning (RL) Techniques for 4G Optimization	28
20	Examples of RL in 4G LTE Networks – MRO, Interference, Scheduling, etc.	29
21	Reinforcement Learning-Based Applications in 4G LTE Networks	30

INTRODUCTION TO TELECOMMUNICATION

- **Telecommunication-** The transmission of signals over a distance for the purpose of communication. In modern times, this process almost always involves the use of electromagnetic waves by transmitters and receivers.

Telecommunication companies created the infrastructure that allows data in words, voice, audio, or video to be sent anywhere in the world. The largest companies in the sector are telephone (both wired and wireless) operators, satellite companies, cable companies, and Internet service providers.

The telecommunications sector consists of three basic sub-sectors: telecom equipment (the largest), telecom services (next largest), and wireless communication.

India is the world's second-largest telecommunications market with 1.207 billion total subscribers as of May 2025 .

Telecom operators make money by providing network connectivity to other telecom companies that need it, and by wholesaling circuits to heavy network users like Internet service providers and large corporations.

1. **Telecom equipment companies**- Telecommunications equipment refers to hardware used mainly for telecommunications such as transmission lines, multiplexers and base transceiver stations.

   - Nokia
   - Huawei
   - Ericsson

2. **Telecom Service Companies**- is an organization that provides services for accessing, using, or participating in the Internet. SPs can include Internet access, Internet transit, domain name registration, web hosting, Usenet service, and colocation.

- Bharat Sanchar Nigam Ltd. (BSNL)
- Bharti Airtel
- Vodafone Idea Limited
- Reliance Jio Infocom

   a. Jio continues to remain on top with 472 million subscribers, followed by Bharti Airtel with 390 million and Vodafone Idea with 265.51 million as of 30th April 2025.

Total subscriber base

a. Bharat Sanchar Nigam Ltd. (BSNL)- 90–91 million (≈7.9%)
b. Bharti Airtel- 390 million (≈33.6%)
c. Vodafone Idea Limited- 205–207 million (≈17.8%)
d. Reliance Jio Infocomm- 472 million (≈40.9% share)

As of July 2025.

3. Wireless communication companies

- Tata Communications
- Reliance Communications
- HexWireless Pvt. Ltd.
- Tejas Networks
- TNS Telecom Network Solutions
- Hughes Communications India
- Xtreme Communications
- Aprecomm
- Cavli Wireless
- WiSig Networks

Types of telecommunication networks

- **Computer & Packet-switched Networks** – E.g., ARPANET, Ethernet, Internet, MPLS, SD-WAN.

- **Public Switched Telephone Network (PSTN)** – Legacy circuit-switched voice systems.

- **Wireless Networks** – Including cellular (2G/3G/4G/5G/6G), Wi-Fi, FWA (e.g., JioAirFiber), satellite broadband.

- **Radio Networks** – Broadcast, narrowband IoT (NB-IoT), public safety, telemetry.

- **Satellite & FWA Networks** – GEO & LEO satellite systems (e.g., Hughes, Satellize), fixed wireless access via 5G or satellite links.

II. COMPANY PROFILE

About company

- **Vodafone Idea Limited (Vi)** is a joint venture between the **Aditya Birla Group** and the **Vodafone Group**.

- It is one of India's major telecom service providers, offering **pan-India voice and data services** across **2G, 4G**, and **limited 5G** networks (3G services have been largely phased out).

- Vi holds a **large spectrum portfolio** in multiple bands (including 900, 1800, 2100, 2500 MHz), supporting data and voice demands.

- The company is contributing to the vision of **'Digital India'** by enabling digital access for millions.

- Vi is **expanding its 5G infrastructure** and is focusing on modernizing networks and deploying AI/ML for better customer experience.

- Offers services for both **retail and enterprise** customers, with a focus on **IoT, cloud, and mobility solutions**.

- Maintains a **strong presence via digital platforms** (Vi App, website) and **offline stores**.

• The company is **listed on both NSE and BSE** in India under the ticker **IDEA**

Vision

"Create world class digital experiences to connect and inspire every Indian to build a better tomorrow."

As of March 2025, Vi has a subscriber base of 199 million, making it third largest mobile telecommunications network in India and 10th largest mobile telecommunications network in the world.

- Vi owns spectrum in 900 MHz, 1800 MHz, 2100 MHz, 2300 MHz and 2500 MHz bands across the country. Organization has procured 3300 MHz and mm-Wave for 5G Rollout.
- Vi also provides services including **Mobile payments, IoT, enterprise offerings and entertainment**, accessible via both digital channels as well as on-ground touch points, centers across the country.

Organization Redesign

The company implemented the new structure which comprised 5 bands (M1 to M5) and a set of corresponding designation prefixes across the company effective from June 2019. VIL also set about evolving a common work ethic and culture to ensure that the merged entity focused on the smooth functioning of the organization.

Strategy

VIL focused on accelerated integration with a very clearly defined five-pillar strategy –

(i) accelerate execution integration

(ii) prioritize investment in terms of profitable areas

(iii) drive average revenue per user (ARPU) up with simplification and upselling

(iv) Focus on partnerships to drive value

III. INTRODUCTION AND BASIC CONCEPTS

I. LTE

1.1 LTE Definition

LTE (Long Term Evolution) is a high-speed wireless communication standard developed by the 3GPP in 2004 as an evolution of UMTS and GSM. Its main goal is to provide high data rates, low latency, and efficient support for packet-switched traffic using a flexible, all-IP network architecture designed for seamless mobility and high-quality service.

1.2 Evolution in LTE

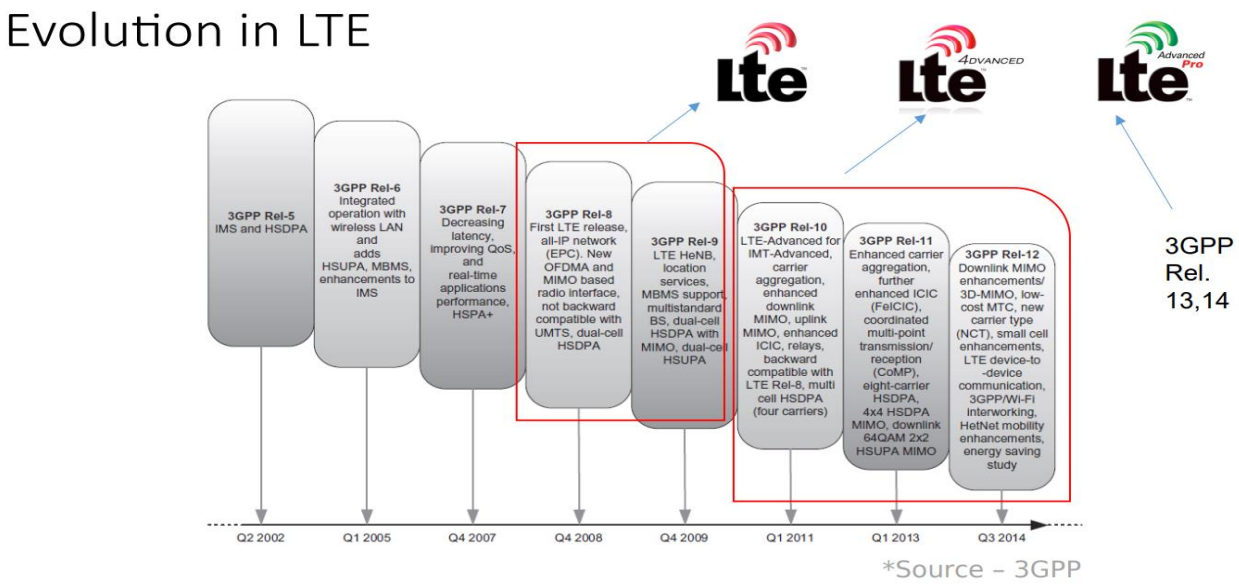

1.3 LTE Architecture

The high-level network architecture of LTE is comprised of following three main components:

- The User Equipment (UE).
- The Evolved UMTS Terrestrial Radio Access Network (E-UTRAN).
- The Evolved Packet Core (EPC).

The evolved packet core communicates with packet data networks in the outside world such as the internet, private corporate networks or the IP multimedia subsystem. The interfaces between the different parts of the system are denoted Uu, S1 and SGi as shown below:

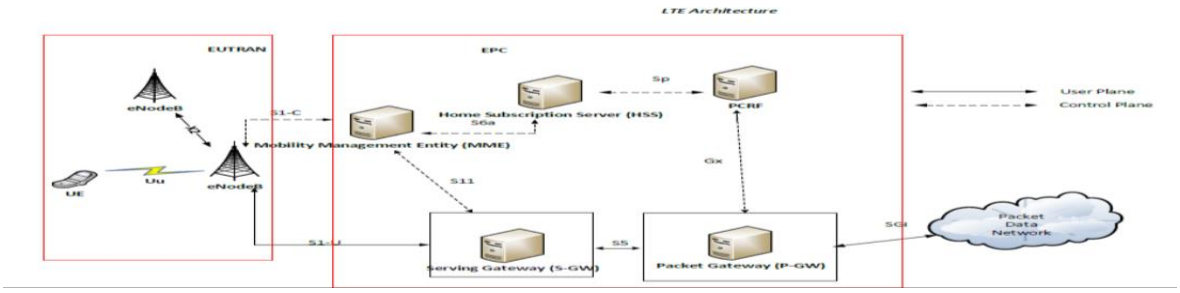

The User Equipment (UE)

The internal architecture of the user equipment for LTE is identical to the one used by UMTS and GSM which is actually a Mobile Equipment (ME). The mobile equipment comprised of the following important modules:

- **Mobile Termination (MT)**: This handles all the communication functions.
- **Terminal Equipment (TE)**: This terminates the data streams.
- **Universal Integrated Circuit Card (UICC)**: This is also known as the SIM card for LTE equipment. It runs an application known as the Universal Subscriber Identity Module (USIM).

The E-UTRAN (The access network)

The E-UTRAN handles the radio communications between the mobile and the evolved packet core and just has one component, the evolved base stations, called **eNodeB** or **eNB**. Each eNB is a base station that controls the mobiles in one or more cells.

LTE Mobile communicates with just one base station and one cell at a time and there are following two main functions supported by eNB:

- The eNB sends and receives radio transmissions to all the mobiles using the analogue and digital signal processing functions of the LTE air interface.
- The eNB controls the low-level operation of all its mobiles, by sending them signalling messages such as handover commands.

The Evolved Packet Core (EPC) (The core network)

The architecture of Evolved Packet Core (EPC) has been illustrated below. There are few more components which have not been shown in the diagram to keep it simple. These components are like the Earthquake and Tsunami Warning System (ETWS), the Equipment Identity Register (EIR).

5.4 Frame-Structure in LTE

In LTE, DL and UL transmissions are organized into radio frames of 10 ms each. Each frame is divided into ten equally sized subframes. The duration of each subframe is 1 ms. Moreover, each subframe is further divided into two equally sized time slots, that is, each slot is 0.5 ms. 3GPP defines two types of frames based on the duplexing scheme used. These are Type 1 when FDD is used and Type 2 when TDD is used.

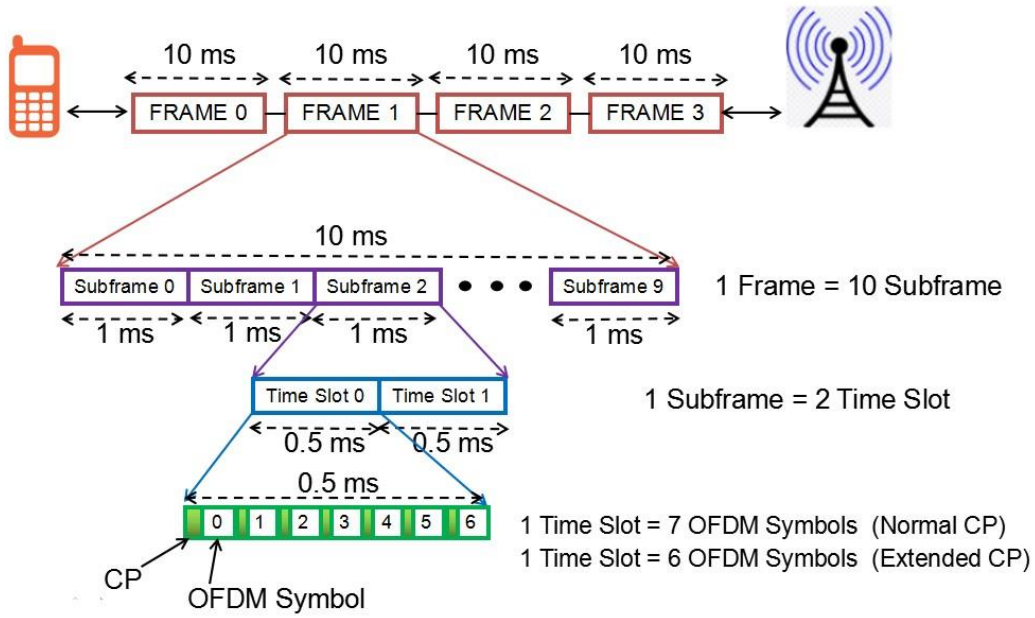

5.5 Call Flow in LTE

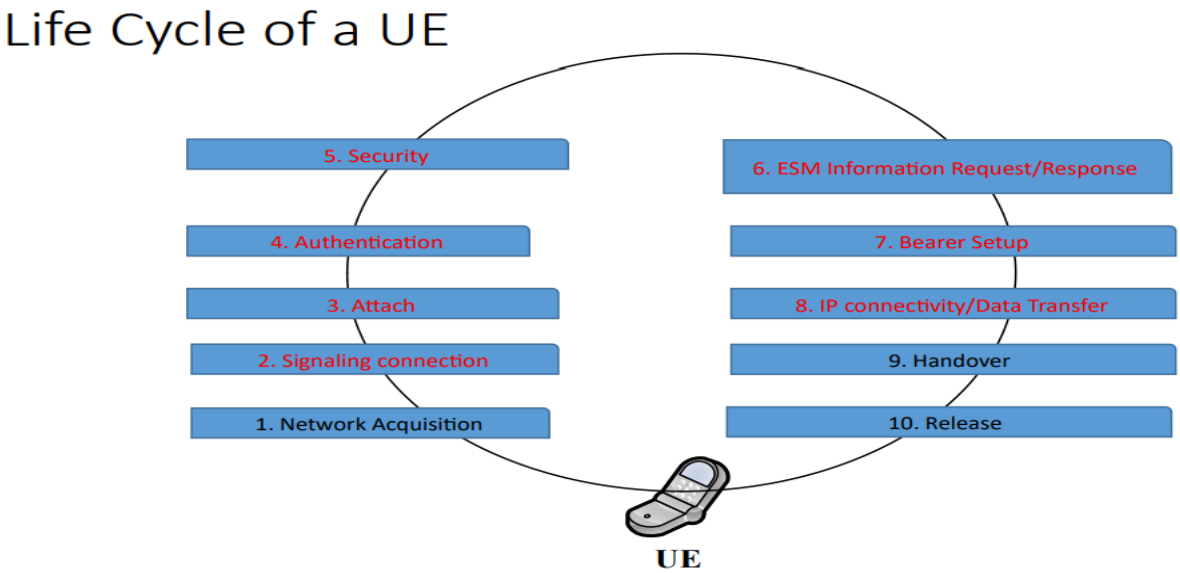

1.(MIB, SIB): Master Information Block (MIBs) and System Information Block (SIBs) elements allow UE to find and sync itself to network.

2.Random Access Preamble (RAP): Is the first message from the UE to eNB, to achieve uplink synchronization in order to obtain the resource for the third message.

3.Random Access Preamble Response (RAP Response): Random Access Preamble response allows the UE to send further messages.

4.Radio Resource Connection (RRC LTE): The UE uses UL-SCH allocation message to eNodeB which contains UE identity (typically S-TMSI: MMEC+M-TMSI) and the establishment cause for the RRC connection.

5.Radio Resource Connection Setup (RRC Setup): eNodeB sends DL-SCH message to the UE in order to create the signaling radio bearer (SRB). The message contains: configuration parameters for uplink RLC, UL-SCH, Power Head Room (PHR) and Uplink Power Control.

6.PDN Connectivity: The UE sends a message to eNodeB which contains: RRC has been completed, Initiate the Attach procedure as Non-access stratum (NAS) payload and PDN Connectivity request.

7.Attach PDN request: eNodeB will send its first message to the core network passing the attach request to the MME. This message is sent via S1AP interface, and it contains the initial UE message which includes: the PDN Connectivity Request, the Tracking Area Identify (TAI) and E-UTRAN Cell Global Identifier (ECGI).

8.Authentication request and info: The MME will reach the HSS will send the scurity tuple to the MME containing K-ASME, AUTN, XRES and RAND.

9.Authentication response: The UE sends the Auth response value which was computed from the key K, AUTN and RAND.

10.Security Mode Complete: Security mode command MME sends the encryption and integrity protection algorithms and key selection identifier (KSI-ASME). The UE response message back to the MME with NAS ciphering and integrity protection.

11.Location update request: Acknowledgment message sent from HSS to MME that contains PDN subscription contexts (EPS subscribed QoS profile and the subscribed APN-AMBR).

12.Session request: Create session request message from the Mobility Management Entity (MME) to the Serving Gateway (SGW) to create a GTP tunnel.

13.Default Bearer Request: Serving Gateway (SGW) will send this request to Packet Data Network Gateway (PGW), to create a new entry in its EPS bearer context table and generates a Charging Id.

14.Default bearer response: The default bearer response from the PGW to the SGW will contain PDN GW User Plane address, PDN GW TEIDs User and Control Plane, EPS Bearer Identity and QoS. On the other hand, PGW will also send Downlink data that will be buffered in the SGW for now.

15.Session response: Acknowledgment message from SGW to the MME that indicates the establishment of GPRS Tunneling Protocol for control (GTP-C) tunnel.

16.Initial context setup request: MME will send eNB initial context setup message containing S1 interface context setup request, NAS attachment accept and activate default bearer request.

17.RRC security mode: The eNodeB will reach the UE with RRC security mode message with the AS integrity protection and encryption algorithms and START parameters. The UE sends to eNodeB acknowledge message that uses the newly activated keys to encrypt and integrity protection.

18.RRC Reconfigure: eNodeB will send RRC reconfigure to activate the default radio bearer.

19.RRC complete: UE will send acknowledgment message and attach RRC LTE complete (EPC Bearer Identity, NAS sequence number, NAS-MAC).
20. Data flowing: Now, the UE has successfully established a connection to the network and the buffered data will be passed to the UE in the Data Radio bearer.

5.6 KPIs in LTE

KPI (key performance indicators) basics including its categories and mentions LTE KPIs. The different test cases of **LTE KPI** are mentioned for each of the KPI categories. As mentioned KPI is the short form of Key Performance Indicator. KPIs can be used for the following tasks:

- To monitor and optimize the radio network performance in order to provide better subscriber quality or to achieve better use of installed network resources
- To detect unacceptable performance related issues in the cellular network immediately. This will enable the operator to take rapid actions in order to preserve the quality of the existing network services.
- To Provide radio frequency planners with the detailed information. This will help them configure the network parameters for optimum use.

Typically, KPI can be categorized into following subcategories:

- Accessibility
- Retainability
- Mobility
- Throughput

ACCESSIBILITY KPI:

RRC Stage:

- The total number of failed RRC Connection establishments due to lack of connected users
- license

- The total number of failed RRC Connection Establishments due to high load
- The number of failed RRC establishments due to failed radio procedure
- The number of RRC Connection Reestablishments attempts that failed due to RRC Connection
- Reestablishment not being enabled
- Poor coverage
- Alarms/Hardware

S-Signaling Setup Stage:

- TN (Transport Network Issue): Check Fiber issue from Core Team.
- Wrongly Configured TAC: Check the Configured TAC values
- Degraded due to H/W Issue: Check the Alarms, identify the Issue and replace the faulty
- Hardware units if required ERAB Setup Stage:
- Radio resources not available
- Transport resource unavailable
- Radio connection with UE lost

RETAINIBILTY KPI

Call Drop

- Call drop ratio is one of the most important metrics to assess the performance or the mobile networks.
- The call drops are also referred as Radio Link Failures (RLF). The mechanisms dealing with RLF are implemented at both UE and eNB side.
- If UE detects radio link problems it tries to recover from RLF during specified interval of time by RRC connection re-establishment procedure.
- If eNB detects a radio link problem it will wait until the recovery (cancellation of RLF state), or release the UE.
- The call drops can also be initiated by the eNB (or MME) in other scenarios such as timing alignment
- timer expiry, S1 reset, etc.

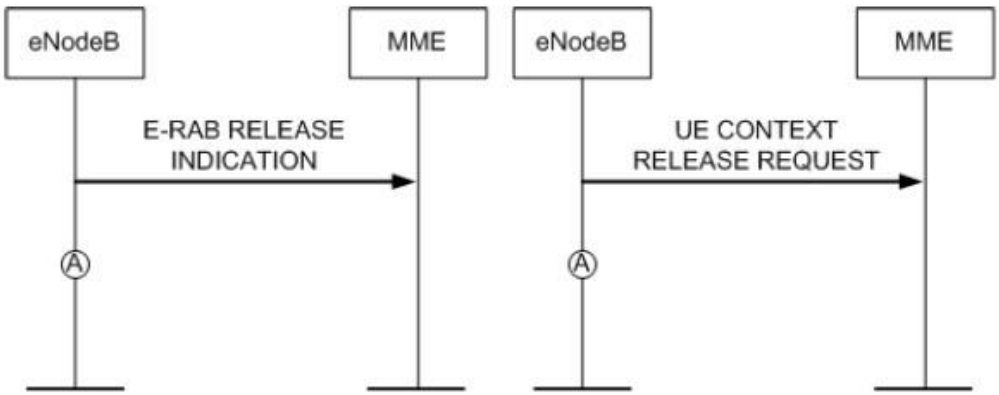

MOBILITY KPI

Are used to measure the performance of network which can handle the movement of users and still retain he service for the user, such as handover

- Intra-Frequency Handover Out Success Rate
- Inter-Frequency Handover Out Success Rate
- Inter-RAT Handover Out Success Rate

Handover Strategy

- TDD 2500 layer has the highest priority followed by FDD 1800, WCDMA and GSM • VoLTE should be enabled for both TDD and FDD layers
- No handovers should be defined on LT800 towards L2500 as 2500 spectrum is in the lower part of Band 41
- Load Balancing not to be enabled between WCDMA and LTE
- VoLTE users must be excluded from Load Balancing
- Load balancing can be activated between the two LTE layers to ensure better end user experience once
- adequate TDD footprint is there
- SRVCC should be enabled for Volte in all LTE layers towards both WCDMA and GSM
- No handover (NACC) should be defined in Dedicated mode for Data from 4G layers towards GSM
- No handovers should be defined from GSM towards WCDMA
- Interworking from FDD to TDD is strictly restricted for Co-located sites only (ie. Don t define any interworking relationli.e. ldle, Dedicated, VoLTE) from near by FDD sites to non-collated TDD sites)

LTE Throughput

LTE throughput depends on the following parameters:

- Bandwidth • Channel quality
- Network load.

Bandwidth. According to 3GPP specifications LTE channel bandwidth can be 1.4, 3, 5, 10, 15, 20 MHz. The wider bandwidth the higher throughput. All available spectrum is divided into Resource Blocks (RB).

Channel quality. Radio conditions impact user bit rates. The better radio conditions the higher throughput is available and vice versa. eNB (eNodeB, base station) selects Modulation and Coding Scheme (MCS) based on current radio conditions. The higher MCS the more bits can be transmitted per time unit. UE (User Equipment, mobile terminal) measures radio channel quality and sends CQI (Channel Quality Indicator) to eNB.

Network load. Available radio resources are divided among active subscribers. So the more subscribers are active and receive/transmit data the less resources are allocated to a given subscriber. It also depends on subscriber and connection (bearer in terms of LTE) priorities.

Overview of 4G/5G technologies

The mobile network industry is evolving rapidly with the rise of 4G and 5G, both integrating the Internet of Things (IoT) to support growing connectivity needs.

4G—based on **LTE (Long Term Evolution)**—marked a shift from hybrid voice-data systems to fully IP-based data networks. It uses technologies like **MIMO** (Multiple Input Multiple Output) and **OFDM** (Orthogonal Frequency Division Multiplexing) to improve speed and spectral efficiency. LTE supports both **FDD** and **TDD** duplexing modes.

LTE-Advanced (LTE-A), an enhancement of 4G, boosts performance through:

1. **Carrier Aggregation** – Combines up to 20 MHz channels for higher data rates.
2. **Massive MIMO** – Up to 8x8 antenna setups using beamforming.
3. **CoMP** – Coordinates signals from multiple cells to reduce interference.
4. **Relay Nodes** – Extend coverage at cell edges via signal regeneration.
5. **HetNet (Heterogeneous Networks)** – Mixes macro and small cells for dense, high-capacity coverage.

5G builds upon LTE-A by scaling HetNet into **ultra-dense small cell deployments**, offering speeds up to **1 Gbps**, ultra-low **latency (<1ms)**, and massive device connectivity. It operates across a wider frequency range, including **sub-6 GHz and mmWave bands**.

Key enablers like **Self-Organizing Networks (SON)** and **network slicing** further drive automation and flexibility in both LTE-A and 5G systems. In many ways, 5G can be seen as an evolution of LTE-A, pushing small cell networks and advanced technologies to new extremes.

The **NGMN Alliance** defines 5G as a **comprehensive, end-to-end ecosystem** enabling a fully connected, mobile society. It supports both existing and emerging use cases through seamless experiences and sustainable business models.

LTE-Advanced (LTE-A) forms the backbone of **5G below 6 GHz**, while **6–100 GHz bands** introduce new technologies. One major leap is **Massive MIMO**—expanding antenna arrays from 16×16 up to 256×256—to boost speed, reliability, and coverage.

Modern 5G trials use **beamforming** and **ultra-dense small cells** to meet demanding performance goals:

- **1000× network capacity increase**
- **100+ billion device connectivity**
- **Up to 10 Gbps data rates**
- **<1 ms ultra-low latency**

5G is not just a faster network—it's a foundation for smart cities, autonomous vehicles, industrial automation, and beyond.

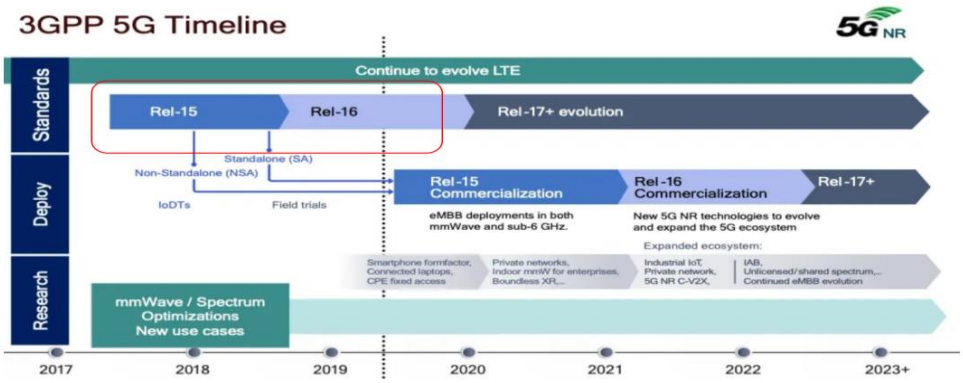

5G Deployment Architectures

Per 3GPP TR 21.915, Two deployment options are defined for 5G:

1. The **"Non-Stand Alone" (NSA)** architecture, where the 5G Radio Access Network (AN) and its New Radio (NR) interface is used in conjunction with the existing LTE and EPC infrastructure Core Network (respectively 4G Radio and 4G Core), thus making the NR technology available without network replacement. In this configuration, only the 4G services are supported, but enjoying the capacities offered by the 5G New Radio (lower latency, etc). The NSA is also known as "E-UTRA-NR Dual Connectivity (EN-DC)" or "Architecture Option 3".

2. The **"Stand-Alone" (SA)** architecture, where the NR is connected to the 5G CN. Only in this configuration, the full set of 5G Phase 1 services are supported.

Benefits of 5G NSA:

- deliver high-speed connectivity to consumers with 5G-enabled devices
- leverage existing network investments in transport and mobile core

Benefits of 5G SA:

- MNOs can launch new enterprise 5G services such as smart cities, and smart factories
- It is fully virtualized, cloud-native architecture (CNA), which introduces new ways to develop, deploy and manage services
- The architecture enables end to end slicing to logically separate services
- Automation drives up efficiencies while driving down the cost of operating the networks.
- By standardizing on a cloud-native approach, MNOs can also rely on best of breed innovation from both vendors and the open-source communities
- By choosing a cloud-native microservices-based architecture, MNOs can also decide on a variety of deployment models such as on-prem private cloud, public cloud, or hybrid to meet their business objectives

Most commercial 5G networks initially launched using NSA to speed up deployment. However, major operators are now **gradually transitioning to SA** mode to unlock the **full benefits of 5G**, especially for enterprise use cases like autonomous systems, remote surgery, and smart manufacturing.

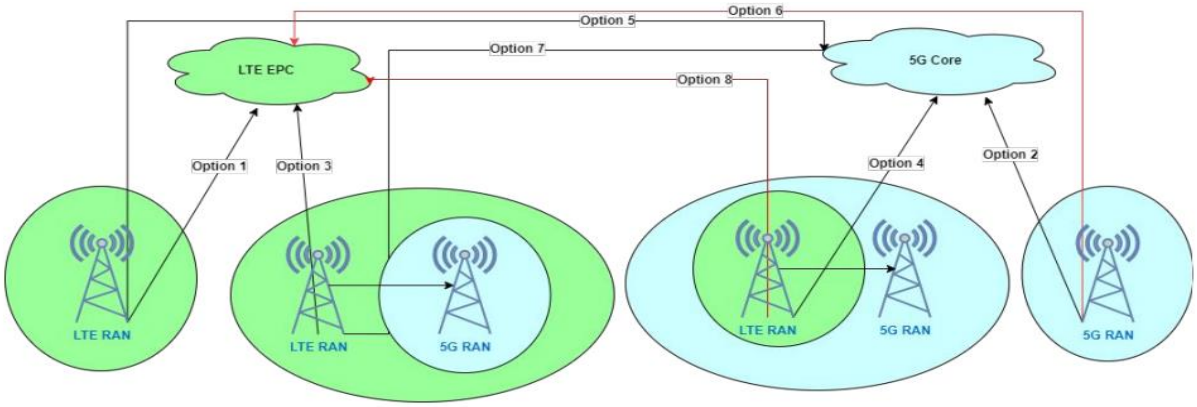

Access Network	LTE only	NR only	LTE with NR for user plane only	NR with LTE for user plane only
EPC Core Network	Option 1 (4G)	Option 6	Option 3	Option 8
5G Core Network	Option 5	Option 2 (Stand-Alone)	Option 7	Option 4

Quality of Service (QoS) in 5G networks:

5G network, a Quality of Service (QoS) Class Identifier (QCI) mechanism, called 5QI, can be used.

5QI is a mechanism in which packets are classified into different QoS classes. In this way, the QoS can be tailored to specific requirements. Each QoS class has its own assigned QoS characteristics (such as packet delay and packet loss). As a result, some packets can get better QoS than other packets. Considering an architecture where Internet Access Services is provided through network slices in parallel to specialized services in other slices, 5QI could be used as a traffic management measure to offer Internet Access Services complying with the rules on reasonable traffic management for the provision of different "categories of traffic".

● In 5G QoS framework is based on QoS Flows which is the finest granularity of QoS differentiation.
● Each QoS Flow is identified by a QoS Flow ID.
● NG-RAN can map multiple QoS Flow IDs to one Radio Bearer or can have a 1:1 relationship. It depends on NG-RAN implementation.
● In 4G we had a 1:1 relationship between QCI and EPS bearers.
● 3GPP has standardized QoS Flow IDs like QCI for various services. More on this later.
● Also notice there is one N3 tunnel between eNB and UPF unlike multiple S5/S8 bearers in LTE.

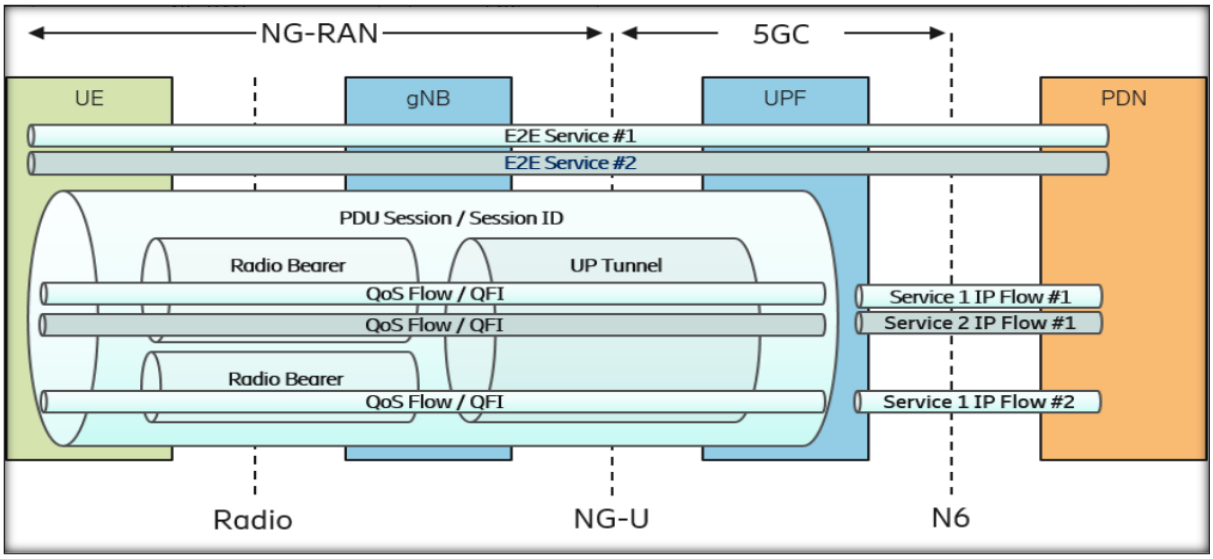

Unlike LTE's bearer-based QoS, **5G uses a flow-based QoS model**, offering greater flexibility and granularity in handling diverse services.

- **End-to-End (E2E) Services**: Span from **UE to external networks** (e.g., internet), each with specific QoS needs.
- **Service Data Flow (SDF)**: Represents one or more IP flows classified by service type (e.g., video, VoIP).
- **5G QoS Flow**: Groups SDFs with similar QoS requirements; it's the **core unit of QoS control** in 5G.
- **QoS Flow ID (QFI)**: Identifies a specific QoS flow within a **PDU session**, ensuring consistent treatment (e.g., scheduling, prioritization).
- **PDU Session**: Carries multiple QoS flows via a single **NG-U tunnel** between **UE and UPF**.
- **QoS Profile Parameters**: Include **5QI**, **ARP (Allocation and Retention Priority)**, and **GFBR (Guaranteed Flow Bit Rate)**, defining the flow's behavior.
- **Radio Bearers**: Each PDU session has unique radio bearers assigned by the **gNodeB**, which map QoS flows to air interface transport.

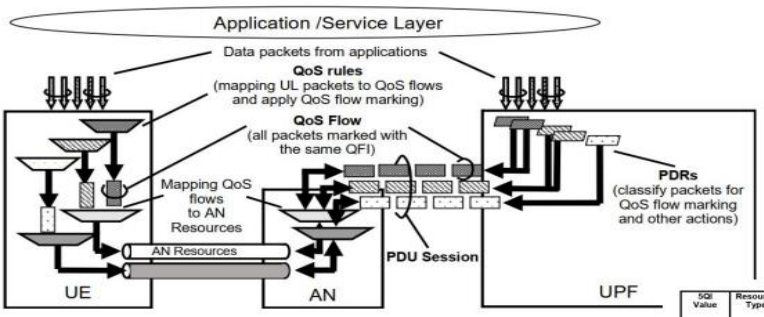

Refer to 3GPP Spec - 23.501 - Table 5.7.4-1

5QI Value	Resource Type	Default Priority Level	Packet Delay Budget	Packet Error Rate	Default Maximum Data Burst Volume (NOTE 2)	Default Averaging Window	Example Services
1	GBR (NOTE 1)	20	100 ms	10^{-2}	N/A	2000 ms	Conversational Voice
2		40	150 ms	10^{-3}	N/A	2000 ms	Conversational Video (Live Streaming)
3		30	50 ms	10^{-3}	N/A	2000 ms	Real Time Gaming, V2X messages Electricity distribution – medium voltage, Process automation - monitoring
4		50	300 ms	10^{-6}	N/A	2000 ms	Non-Conversational Video (Buffered Streaming)
65		7	75 ms	10^{-2}	N/A	2000 ms	Mission Critical user plane Push To Talk voice (e.g., MCPTT)
66		20	100 ms	10^{-2}	N/A	2000 ms	Non-Mission-Critical user plane Push To Talk voice
67		15	100 ms	10^{-3}	N/A	2000 ms	Mission Critical Video user plane

The following table, from *3GPP TS 23.501*, provides the mapping from 5QI to QoS characteristics.

5QI Value & QFI	Resource Type	Priority Level	Packet Delay Budget	Packet Error Rate	Example Services
1	GBR	20	100 ms	10^{-2}	Conversational Voice
2		40	150 ms	10^{-3}	Conversational Video (Live Streaming)
3		30	50 ms	10^{-3}	Real Time Gaming, V2X messages
4		50	300 ms	10^{-6}	Non-Conversational Video (Buffered Streaming)
65		7	75 ms	10^{-2}	Mission Critical user plane Push To Talk voice (e.g., MCPTT)
66		20	100 ms	10^{-2}	Non-Mission-Critical user plane Push To Talk voice
75		25	50 ms	10^{-2}	V2X messages
5	Non-GBR	10	100 ms	10^{-6}	IMS Signalling
6		60	300 ms	10^{-6}	Video (Buffered Streaming) TCP-based (e.g., www, e-mail, chat, ftp, p2p file sharing, progressive video, etc.)
7		70	100 ms	10^{-3}	Voice, Video (Live Streaming) Interactive Gaming
8		80	300 ms	10^{-6}	Video (Buffered Streaming) TCP-based (e.g., www, e-mail, chat, ftp, p2p file
9		90			sharing, progressive video, etc.)
69		5	60 ms	10^{-6}	Mission Critical delay sensitive signalling (e.g., MC-PTT signalling)
70		55	200 ms	10^{-6}	Mission Critical Data (e.g. example services are the same as QCI 6/8/9)
79		65	50 ms	10^{-2}	V2X messages

5G QoS Flow: Description & Characteristics

In 5G, each **PDU session** can support multiple **QoS flows**, which are defined either during session establishment or modification. Each QoS flow includes key parameters to guide **packet handling** across the network.

QoS Flow Description Parameters

1. **5QI (5G QoS Identifier)** – Maps to a standardized QoS behaviour.
2. **ARP (Allocation and Retention Priority)** – Controls resource allocation during congestion.

For GBR (Guaranteed Bit Rate) Flows:

- **GFBR** (Uplink & Downlink)
- **MFBR** (Max Flow Bit Rate)
- Max Packet Loss Rate

- **Delay-Critical Resource Type**
- **Notification Control**

For Non-GBR Flows:

- RQA (Reflective QoS Attribute)
- Session-AMBR
- UE-AMBR

QoS Flow Performance Characteristics

Each QoS flow receives specific **packet treatment between the UE and UPF**, defined by:

- **Resource Type**: GBR / Delay-critical GBR / Non-GBR
- **Priority Level**
- **Packet Delay Budget**
- **Packet Error Rate**
- **Averaging Window** (for GBR, Delay-critical GBR)
- **Max Data Burst Volume** (Delay-critical GBR only)

These characteristics help fine-tune node-level behaviour (e.g., RAN protocol settings). **5QI values** act as pre-configured QoS templates and are only signalled if modified. This approach supports **efficient, scalable QoS** across dynamic 5G services—from real-time video to industrial automation.

5G Use Cases and QoS challenge:

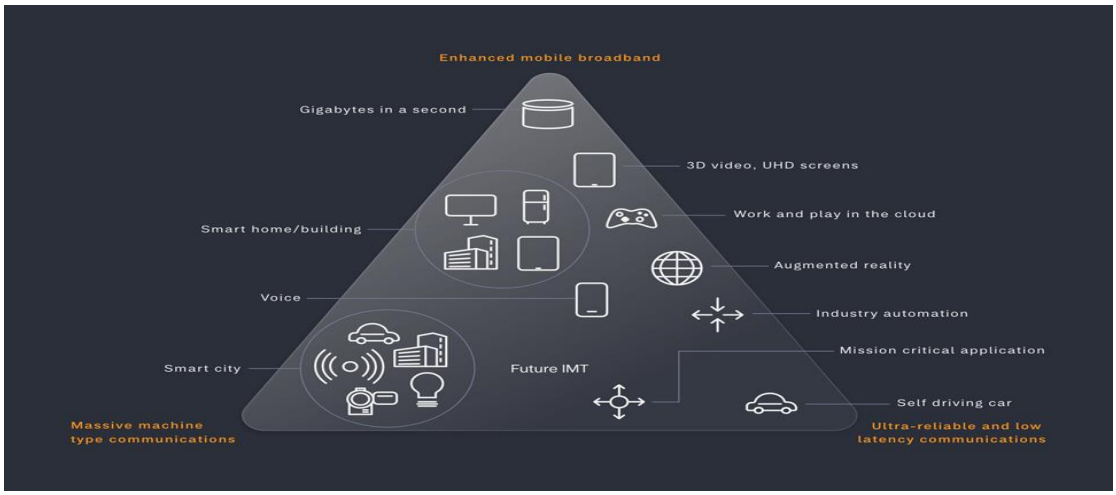

5G networks are designed to support **three major service categories**, each with distinct **Quality of Service (QoS)** requirements:

1. **Enhanced Mobile Broadband (eMBB):**
   Focuses on **high-speed internet**, **4K/8K video streaming**, and **cloud gaming**. With peak speeds up to **20 Gbps**, eMBB demands **high data rates**, **low latency**, and **consistent throughput**, especially in dense urban areas and stadiums. Dynamic QoS ensures smooth performance even during peak traffic.
2. **Massive Machine-Type Communications (mMTC):**
   Targets **IoT applications**, **smart cities**, and **sensor networks**, connecting billions of low-power devices. These require **high reliability**, **network scalability**, and **efficient handling of massive device traffic**, even though individual data rates are low.
3. **Ultra-Reliable Low-Latency Communications (URLLC):**
   Supports **mission-critical applications** like **autonomous vehicles**, **remote surgeries**, and **industrial automation**. These demand **<1 ms latency** and **ultra-high availability** to prevent any data loss or delay.

Modern 5G networks must **simultaneously support eMBB, mMTC, and URLLC** over a shared infrastructure. This requires **adaptive QoS frameworks**, intelligent traffic prioritization, and **efficient spectrum/resource allocation** to meet the unique needs of each use case without compromising overall network performance.

AI-Driven Optimization for Enhancing 4G/5G Network Performance:

As wireless communication evolves from **4G LTE to 5G**, improvements in **speed, latency, and device connectivity** also introduce new **QoS challenges**—especially for data-heavy and latency-sensitive services like **streaming, gaming, autonomous driving, and industrial IoT**.

Traditional rule-based optimization methods are no longer sufficient. To manage **real-time demands, network complexity, and high user densities**, operators are increasingly turning to **Artificial Intelligence (AI)**.

Why AI?

AI, powered by **machine learning (ML)**, **deep learning (DL)**, and **reinforcement learning (RL)**, enables:

- **Dynamic resource management**
- **Predictive analytics**
- **Closed-loop automation**

These capabilities ensure **adaptive and reliable QoS**, even in variable and dense traffic environments.

AI Application	Description	Benefit to Network Performance
Traffic Prediction	Uses time-series forecasting (e.g., LSTM, ARIMA) to predict data traffic in different cells.	Enables proactive load balancing and congestion prevention.
Resource Allocation Optimization	AI models (e.g., deep Q-learning) dynamically assign bandwidth, RBs, and spectrum to users.	Improves throughput, spectral efficiency, and fairness.
Power Control	Adaptive control of transmission power using AI to reduce interference and energy consumption.	Enhances SINR, reduces power wastage, and extends battery/network life.
Handover Management	AI predicts optimal handover timing and targets using mobility patterns and signal strength.	Reduces call drops, ping-pong effects, and handover latency.
Anomaly Detection	Detects faults or abnormal KPI patterns using unsupervised learning (e.g., autoencoders, clustering).	Enables rapid issue resolution and minimizes service degradation.
QoE Prediction and Enhancement	AI maps network QoS metrics to user-perceived QoE using supervised learning models.	Helps optimize for user satisfaction, not just technical metrics.
Network Slicing Optimization	AI helps dynamically allocate resources to network slices based on service demand and priority.	Guarantees SLA compliance for different applications (e.g., URLLC, eMBB, mMTC).
Load Balancing	Machine learning redistributes traffic based on real-time load, user behaviour, and capacity.	Prevents cell overloading and improves overall utilization.
Beamforming and Antenna Tuning	Deep learning is used to predict optimal beam patterns and antenna configurations.	Increases coverage and signal quality in mmWave and massive MIMO environments.
Self-Healing Networks	AI detects and mitigates network failures automatically via fault isolation and rerouting.	Reduces downtime and improves service availability.
Intelligent SON (i-SON)	AI enhances SON modules for auto-configuration, optimization, and healing.	Reduces operational costs and ensures consistent network quality.
Latency Optimization	AI models detect causes of latency and optimize routing and buffering strategies accordingly.	Critical for low-latency 5G services like AR/VR and autonomous driving.

Table1: AI applications

<u>Advantages of AI-Driven Solutions for Network Performance and QoS:</u>
AI is revolutionizing mobile network management by enhancing **QoS**, **efficiency**, **security**, and **cost-effectiveness**. Below are the core advantages:

1. Enhanced Network Efficiency

- **Real-Time Resource Allocation**: AI dynamically manages bandwidth, power, and spectrum.
- **Predictive Load Balancing**: Traffic forecasting helps avoid congestion.
- **Intelligent Network Slicing (5G)**: AI allocates resources to eMBB, URLLC, and IoT as per demand.

Impact: Better throughput, latency, and asset utilization.

2. Improved QoS and User Experience

- **Early Anomaly Detection**: Prevents service disruptions like jitter or packet loss.
- **AI-Powered Beamforming**: Enhances coverage and link reliability.
- **Personalized QoS**: User-centric tuning using federated learning.

Impact: Smooth streaming, real-time gaming, reliable VoIP.

3. Reduced Operational Cost & Energy Use

- **Green Networks**: AI optimizes base station energy consumption.
- **Predictive Maintenance**: Detects hardware issues before failure.
- **Self-Healing Networks**: Cuts down manual intervention and OPEX.

Impact: Up to 30% energy savings and extended equipment life.

4.Real-Time Adaptability to Dynamic Network Conditions

- Self-Organizing Networks (SONs): AI autonomously adjusts network parameters (e.g., handover thresholds, interference levels) in real time.
- Reinforcement Learning for Dynamic Optimization: AI continuously learns and adapts to changing traffic patterns and user demands.

Impact: Faster response to network fluctuations, improved reliability in crowded

5. Improved Security & Fraud Prevention

- **Intrusion Detection**: AI identifies DDoS, malware, and breaches.
- **Behavioural Analytics**: Detects fraud via unusual traffic patterns.

Impact: Stronger protection and reduced revenue loss.

AI-Driven Proposed Solutions in 4G/5G Network Optimization:

AI in Traffic Management:

Integrating **Artificial Intelligence (AI)** into 5G traffic management significantly enhances **prediction accuracy**, **real-time adaptability**, and **network efficiency** amid rapidly growing data volumes (expected 75% 5G share by 2029). Traditional models like **ARIMA/SARIMA** help capture seasonality but fall short in handling 5G's complex, non-linear traffic patterns.

To address this, **Machine Learning (ML)** models such as **Support Vector Machines (SVM)** and **Random Forests** provide improved traffic forecasting and anomaly detection. **Deep Learning (DL)** techniques—especially **LSTM** and **Transformer-based models**—are more effective at learning long-term patterns in dynamic network data, aiding in congestion control, spectrum management, and link adaptation.

Reinforcement Learning (RL), including **Deep RL (DRL)** and **DDPG**, offers intelligent scheduling for high-volume, delay-tolerant traffic while preserving QoS for time-sensitive services. AI also supports **self-optimization**, **interference mitigation**, and **routing** improvements, including in **vehicular networks**, **wireless sensor networks**, and **Massive MIMO** systems.

Overall, AI technologies like **CNN**, **RNN**, **LSTM**, and **DRL** are driving a major shift toward **adaptive, resilient, and efficient 5G networks**, enabling real-time decision-making, smarter resource allocation, and future-ready network infrastructure.

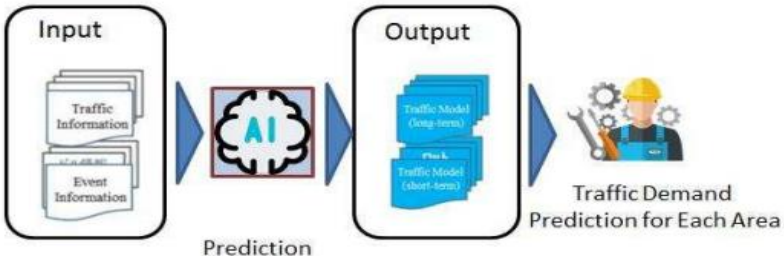

Fig- Prediction method of network demand based on AI

Benefits of AI-Driven Traffic Management

- **High Forecast Accuracy** – Learns complex traffic dynamics
- **Real-Time Adaptability** – Instantly responds to traffic changes
- **Operational Automation** – Reduces manual effort and delays
- **Scalability** – Suitable for dense and large-scale network deployments

1. LSTM in AI For Traffic Prediction:

LSTM is an advanced form of **Recurrent Neural Network (RNN)** designed to handle **sequential data** and solve the **vanishing gradient problem** found in traditional RNNs. It's highly effective in capturing **long-term dependencies** in time-series tasks.

Key Features of LSTM:

1. **Input Sequence**: A series of data points (e.g., traffic load over time).
2. **LSTM Layers**: Special layers that capture long-term dependencies.
3. **Dense Layer**: For outputting the prediction.
4. **Activation Function**: Usually **ReLU** (Rectified Linear Unit) or **tanh** for LSTM layers, and **linear** activation for the final output.

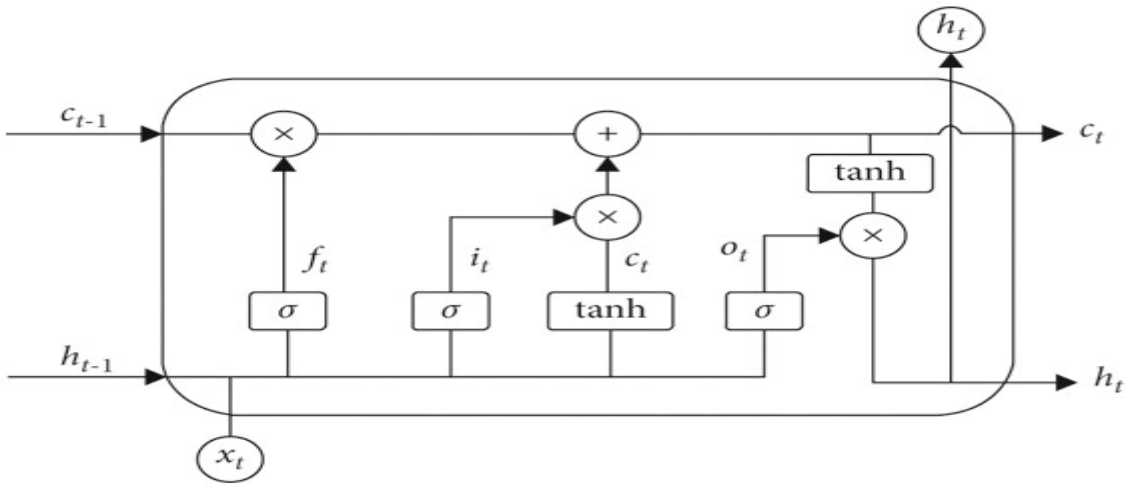

Fig: Basic structure of LSTM.

LSTM Forward Propagation: Key Steps

LSTM processes sequential data by regulating the flow of information through **gates** and **cell states**, enabling it to retain or forget information over time.

Step 1: Forget Gate

- **Purpose**: Decide what past information to discard.
- **Equation**:

  $$f_t = \sigma\left(W_f \cdot [h_{t-1}, x_t] + b_f\right),$$

- **Output**:

Forget vector $f_t \in [0, 1]$ controls what portion of C_{t-1} is retained.

Step 2: Input Gate & Cell State Update

- **Input Gate** decides what new information to store:
  $i_t = \sigma(W_i \cdot [h_{t-1}, x_t] + b_i)$
- **Candidate values** for new state:
  $\tilde{C}_t = \tanh(W_C \cdot [h_{t-1}, x_t] + b_C)$
- **Update Cell State**:
  $C_t = f_t * C_{t-1} + i_t * \tilde{C}_t$

Step 3: Output Gate

- **Output Gate** decides what to output:
  $o_t = \sigma(W_o \cdot [h_{t-1}, x_t] + b_o)$

- **Hidden State (Output)**:
  $h_t = o_t * \tanh(C_t)$

Backpropagation

- **Error terms** are computed backward through time.
- **Gradients** of weights are calculated using backpropagation through time (BPTT).
- **Weights** are updated via gradient descent.

LSTM's structure allows it to **retain important information**, **forget irrelevant data**, and **output contextually useful results**, making it ideal for **time-series predictions** and **sequential learning tasks** in 5G network optimization, traffic forecasting, and anomaly detection.

Why LSTM for 4G/5G Network Optimization?
Modern 4G and 5G networks generate large volumes of time-series data from user mobility, traffic patterns, signal quality (e.g., RSRP, SINR), and KPI logs. LSTM is highly suitable because it:

- **Captures temporal dependencies** in network KPIs.
- **Predicts future traffic loads**, signal degradation, or handover failures.
- **Learns patterns** in user behavior and network performance over time.

Table: Applications of LSTM in 4G/5G Network Optimization

Area	**LSTM Role**
Traffic Prediction	Predicts future network load based on historical traffic patterns.
Mobility Management	Predicts user movement to optimize handovers and reduce dropped calls.
QoS/QoE Prediction	Forecasts Quality of Service metrics like throughput, latency, jitter.
Resource Allocation	Predicts resource demand to optimize RB (Resource Block) assignment.

Area	LSTM Role
Anomaly Detection	Detects abnormal KPI behavior (e.g., due to interference or hardware issues).
Self-Organizing Networks (SON)	Enables predictive automation in network tuning and parameter adjustments.

Benefits of Using LSTM in 4G/5G Networks

- **Accuracy:** Learns temporal correlations more effectively than traditional ML models.
- **Adaptability:** Handles variable-length sequences (e.g., daily vs hourly data).
- **Proactivity:** Enables predictive optimizations rather than reactive fixes.
- **Automation:** Enhances closed-loop SON systems with predictive intelligence.

Limitations

- Requires significant training data and computational power.
- Model tuning can be complex (e.g., setting sequence length, number of layers).
- Not ideal for very short sequences or datasets with weak temporal dependencies.

LSTM models offer powerful capabilities for 4G/5G network optimization by predicting and learning from time-dependent patterns in telecom data. When integrated with SON frameworks, LSTMs help networks become more **adaptive, intelligent, and autonomous**, improving user experience and operational efficiency.

2.1 AI Techniques for Resource Allocation in 4G/5G

AI is transforming how 4G/5G networks allocate resources by enabling **adaptive**, **real-time**, and **data-driven** decision-making that outperforms traditional static or model-based approaches.

Limitations of Traditional Methods:

- **CSI-based allocation** leads to high system overhead (~25%) and poor scalability in dense 5G environments.
- **Centralized algorithms** for RRH-BBU-user connections struggle under rising user and traffic complexity.
- **mmWave beamforming** and hybrid techniques face challenges in delay and user-specific optimization.

AI-Driven Approaches:

1. Machine Learning (ML) for MIMO & CSI Prediction

- Enhances **channel estimation** through data compression and faster processing.
- Still limited under heavy 5G traffic and imperfect CSI conditions.

2. Reinforcement Learning (RL) & Deep RL (DRL)

- Learns optimal policies by interacting with dynamic network environments.
- Enables **real-time**, **distributed**, and **autonomous** resource allocation.
- Applied to **network slicing**, improving throughput and latency under diverse user demands.

3. Graph Neural Networks (GNNs / GCNs)

- Model relationships between network elements (e.g., users, RRHs) to **optimize allocations** contextually.

4. Evolutionary & Heuristic Techniques

- **Genetic Algorithms (GA)**: Evolve optimal configurations using selection, crossover, and mutation.
- **Simulated Annealing, PSO**: Minimize interference and optimize spectral efficiency.

5. Random Forests & Hybrid ML Classifiers

- Used in centralized schedulers for **binary classification-based resource decisions**.
- Effective but require further tuning and training efficiency improvements.

Impact of AI in Resource Allocation

- **Higher Throughput**
- **Lower Latency**
- **Real-time Adaptability**

- **Efficient Spectrum Use**
- **Reduced System Overhead**

AI-driven resource allocation—especially with **RL, DRL, and GCNs**—enables **dynamic**, **scalable**, and **efficient** management in 5G networks. These techniques offer a major leap over traditional methods, paving the way for **smart, self-optimizing 5G and future 6G networks**.

2.2.1 Key AI Techniques for Resource Allocation

Table2: Key AI Techniques for Resource Allocation

AI Technique	Application Area	Description & Benefits
Reinforcement Learning (RL)	Dynamic RB allocation, power control, spectrum management	RL agents learn optimal resource allocation policies by interacting with the network environment to maximize long-term rewards (e.g., throughput, fairness).
Deep Reinforcement Learning (DRL)	Complex, large-scale multi-user environments	Combines neural networks with RL (e.g., DQN, DDPG) to handle high-dimensional resource allocation problems under uncertainty.
Multi-Agent Reinforcement Learning (MARL)	Coordinated decisions across multiple base stations	Agents learn to cooperatively allocate resources without centralized control, ideal for ultra-dense 5G networks.
Supervised Learning	Resource demand prediction, traffic estimation	ML models (e.g., SVM, Random Forest, Neural Networks) predict future resource needs based on historical data, enabling proactive allocation.
Unsupervised Learning	User grouping and clustering	Algorithms like K-Means and DBSCAN group users or traffic types for group-based resource scheduling, improving efficiency.
Fuzzy Logic with AI	Adaptive modulation and coding decisions	Combines fuzzy logic with ML for rule-based but adaptive decision-making under uncertain input conditions.
Genetic Algorithms (GA)	Global optimization of resource scheduling	GA searches optimal allocation strategies in large solution spaces, especially for multi-objective problems (e.g., throughput vs. energy efficiency).
Game-Theoretic AI Models	Inter-cell interference coordination	AI learns optimal strategies considering competing objectives among users or cells, reducing conflicts and improving fairness.

3.Reinforcement Learning Techniques for 4G Network Optimization

Although RL is often highlighted in 5G contexts, it has proven highly effective in enhancing **4G LTE network performance** by enabling intelligent, adaptive, and self-optimizing behaviours.

Q-Learning

- **Overview**: A model-free RL algorithm that uses a Q-table to learn optimal actions based on environment feedback.
- **Applications in 4G**:
  - **Resource Block Allocation**: Optimize eNodeB scheduling based on CQI, buffer status, and traffic type.
  - **Handover Optimization**: Tune Handover Margin and Time-to-Trigger to minimize drops and ping-pongs.
  - **Power Control**: Adjust uplink/downlink power dynamically to maintain SINR while reducing interference.

Deep Q-Networks (DQN):

- **Description:** While often associated with 5G's higher complexity, DQN (integrating deep neural networks with Q-learning) can also be beneficial in 4G scenarios with larger state spaces. It allows the agent to learn from raw input data without explicit feature engineering.
- **Application in 4G:**
  - **Advanced Scheduling:** When the number of users or resource configurations becomes very large, traditional Q-tables become infeasible. DQN can map complex network states (e.g., a combination of CQI values from many users, buffer states, traffic types) to optimal scheduling actions.
  - **Inter-Cell Interference Coordination (ICIC/eICIC):** While 4G introduced static and semi-static ICIC mechanisms, DRL could potentially learn dynamic and adaptive interference coordination policies by observing the impact of different resource partitioning and power control settings on overall interference levels.

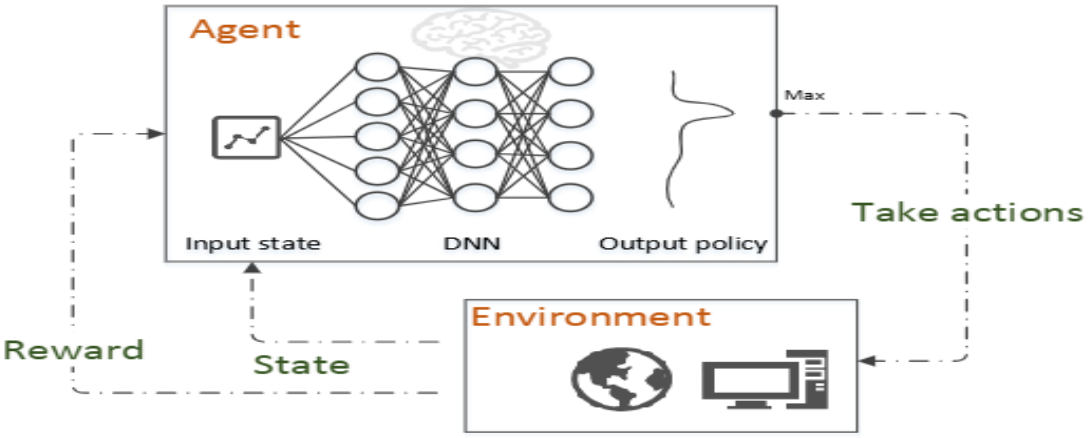

Fig. 1: The illustration of deep Q-learning.

Policy Gradient Methods

- **Overview**: Learn policies directly instead of value functions—ideal for continuous or large action spaces.
- **Applications in 4G**:
  - **Fine-Grained Power Control**: Continuously optimize transmit power.
  - **Antenna Tilt Optimization**: Adjust down tilt angles to balance coverage and interference.

Multi-Agent Reinforcement Learning (MARL)

- **Overview**: Involves decentralized agents (e.g., base stations) learning in coordination or competition.
- **Applications in 4G**:
  - **Cooperative Mobility Management**: Optimize handovers across eNodeBs.
  - **Distributed Load Balancing**: Adjust traffic across cells to prevent overload.
  - **Interference Mitigation**: Coordinate power or frequency strategies among neighbouring cells.

Benefits of RL in 4G Network Optimization

- **Adaptability to Real-Time Dynamics:** 4G networks, though more predictable than 5G, still experience dynamic changes in traffic, user mobility, and channel conditions. RL agents can adapt their policies to these changes in real-time, outperforming static, rule-based optimization.
- **Automated and Self-Optimizing Networks (SON):** RL contributes significantly to the vision of SON, enabling network elements to learn and optimize their behavior autonomously, reducing manual intervention and operational costs.
- **Improved User Experience:** By optimizing handovers, resource allocation, and load balancing, RL can lead to fewer dropped calls, higher data speeds, and more consistent service quality for 4G users.
- **Enhanced Network Efficiency:** Efficiently using the available radio resources (spectrum, power, time) is a continuous challenge. RL helps in maximizing throughput, minimizing energy consumption, and achieving better spectral efficiency.
- **Handles Complex Interactions:** The interdependencies between various network parameters and the impact of one decision on others are complex. RL's model-free approach allows it to learn these complex relationships without explicit programming

4. Reinforcement Learning-Based Applications in 4G LTE Networks

Reinforcement Learning (RL) has emerged as a compelling solution to many of the challenges associated with radio resource management in 4G LTE networks. Despite the evolution toward 5G, 4G LTE networks continue to form the backbone of mobile communication systems across the globe. RL's ability to learn optimal decision-making strategies in dynamic environments without explicit programming makes it particularly suitable for complex and evolving wireless communication tasks.
This section highlights two prominent use cases—Mobility Robustness Optimization and Interference Management—where RL techniques, especially model-free methods such as Q-learning and multi-agent systems, have demonstrated significant potential to enhance network efficiency, reduce performance bottlenecks, and improve overall Quality of Service (QoS).

4.1. Mobility Robustness Optimization (MRO)

Problem Context:

Mobility management is a critical function in LTE networks, especially in high-density and high-mobility environments. A fundamental challenge lies in executing efficient handovers as User Equipment (UE) transitions from one cell to another. Inefficient handovers—triggered either prematurely (too early), too late, or directed to an inappropriate target cell—can result in increased call drop rates, radio link failures (RLFs), or ping-pong effects (repetitive handovers between the same set of cells), all of which deteriorate the user experience.

RL-Based Solution:

Reinforcement Learning provides a model-free approach for dynamically learning optimal handover parameter configurations at the base station (eNodeB). Specifically, a Q-learning agent can be deployed at the eNodeB to monitor real-time Key Performance Indicators (KPIs) such as handover success rates, ping-pong occurrences, and dropped calls.
The agent models the environment using the handover metrics as the **state space**, while the **actions** correspond to adjustments of handover parameters such as the *A3 offset* (which defines the signal level difference threshold for initiating a handover) and the *Time-to-Trigger* (TTT), which is the time delay before executing a handover after the threshold is met.
A **reward function** is designed to reflect mobility performance, where successful handovers yield positive rewards and failures or ping-pongs incur penalties. Through iterative learning, the agent converges toward an optimal policy that minimizes negative handover outcomes and maximizes robustness.

Impact and Benefits:

This RL-based MRO framework leads to:

- Significant reductions in call drop and handover failure rates.
- Lower ping-pong ratios, resulting in energy and signaling efficiency.
- Enhanced user experience, especially for users at the cell edge or in high-speed mobility scenarios (e.g., vehicular users).

4.2. Interference Management

Problem Context:

Inter-cell interference (ICI) remains one of the principal constraints in LTE, particularly affecting users at the boundaries of neighboring cells. Traditional interference coordination schemes such as **Inter-Cell Interference Coordination (ICIC)** and **enhanced ICIC (eICIC)** utilize semi-static strategies like frequency reuse, power control, and *Almost Blank Subframes (ABS)* to mitigate interference. However, such static configurations often fail to adapt to real-time network dynamics such as user distribution, mobility, and traffic demand.

RL-Based Solution:

Reinforcement Learning provides a flexible mechanism to adapt interference mitigation strategies based on current radio conditions. An RL agent (or a collection of agents, in the case of multi-agent RL) is deployed at the eNodeBs to learn optimal policies for adjusting control parameters such as:

- Downlink transmit power.
- Frequency partitioning schemes.
- ABS patterns in time-domain scheduling.

The agent's **state** may include real-time measurements such as Signal-to-Interference-plus-Noise Ratio (SINR), Resource Block usage, and user equipment distribution. **Actions** involve fine-tuning power levels or adjusting time/frequency resource allocations. A **reward function** can be structured around improvements in cell-edge throughput, overall spectral efficiency, and fairness metrics.

In **multi-agent RL**, neighboring eNodeBs function as independent agents that either coordinate (cooperative learning) or compete (non-cooperative learning) to minimize mutual interference. Cooperative frameworks may include shared observations or policy negotiation to reach globally optimal interference configurations.

Impact and Benefits:

Through this adaptive approach, RL-based interference management enables:

- Enhanced **cell-edge performance**, especially for users in overlapping coverage areas.
- Dynamic, real-time adjustment of interference parameters, leading to improved network responsiveness.
- Better **spectrum utilization** and **energy efficiency**, with fewer dropped packets and retransmissions.

4.3. Summary and Broader Implications

While 5G networks inherently present a broader and more dynamic landscape for RL applications due to features such as network slicing, ultra-dense deployments, and millimeter-wave communications, the deployment of RL in 4G LTE systems has already demonstrated substantial benefits. The key strengths of RL—self-learning, adaptability, and

autonomy—allow it to address long-standing optimization challenges in LTE environments, such as:

- Dynamic radio resource allocation.
- Mobility optimization.
- Power and interference control.

By reducing reliance on static configuration rules and enabling real-time optimization based on empirical feedback, RL has contributed meaningfully to the vision of **Self-Organizing Networks (SON)**. In doing so, it not only enhances the user experience but also reduces the operational complexity and cost burden on telecom operators.
The application of RL to LTE networks represents an important evolutionary step in mobile network intelligence, serving as a practical foundation for the wider adoption of AI in next-generation communication systems.

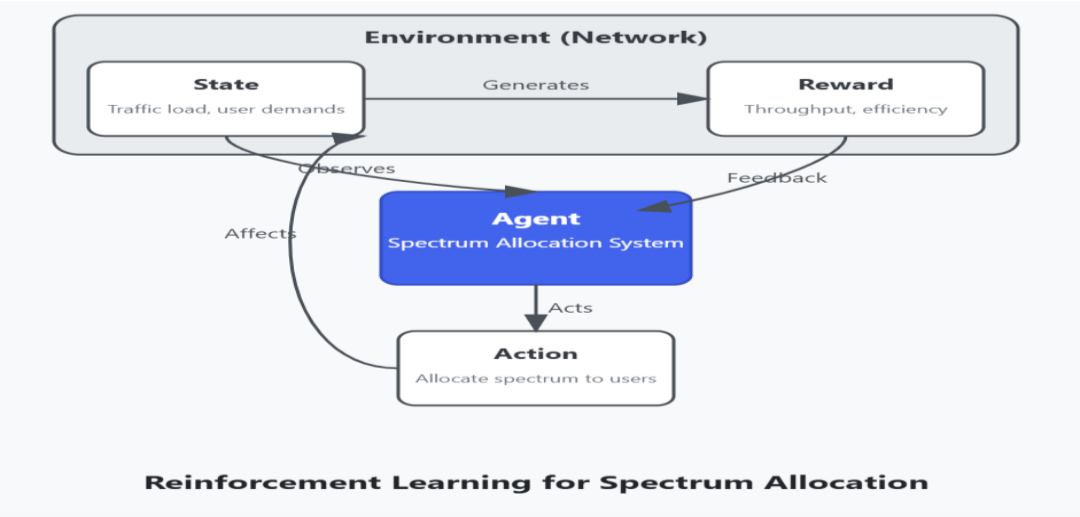

Key Components of RL Model				
1.Agent: The decision-maker (e.g., spectrum allocation system).	**1.Environment**: Represents the network, where the agent interacts and observes states	**1.State**: The current network conditions (e.g., traffic load, user demands).	**Action**: Possible decisions the agent can take (e.g., allocate spectrum to users).	**Reward**: A feedback signal based on the action taken (e.g., higher throughput yields a positive reward).